AWA050B

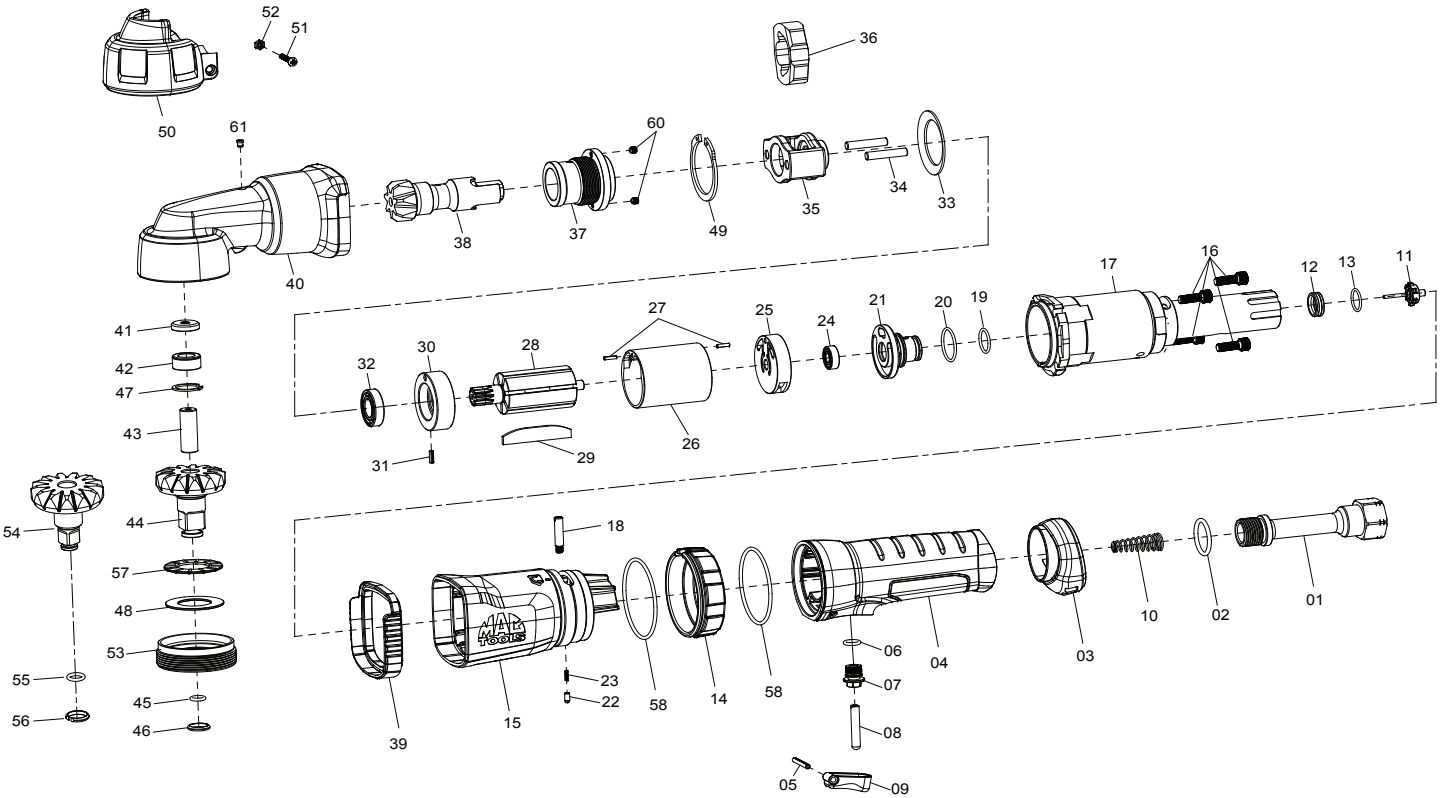
52
51
36
50
61
60
34
33
35
49
37
38
40
17
16
12
13
11
41
27
25
24
21
20
19
42
32
30
28
47
43
31
29
26
54
44
18
57
48
53
55
45
56
46
39
15
23
22
58
14
58
06
07
08
05
09
04
03
10
02
01

ITEM #	PART #	DESCRIPTION	QTY
	AWA038B	3/8" Drive Right Angle Impact	
	AWA050B	1/2" Drive Right Angle Impact	
1	30P200035	Air Inlet	1
3	30H200384	Exhaust Deflector	1
4	30H100035-01	Handle Grip-MAC	1
7	30P200038	Valve Stem Seat	1
8	30P200039	Valve Stem	1
9	30P200023	Trigger	1
10	30R200273	Valve Spring	1
11	30P100040	Throttle Tip Valve Assembly	1
12	30P200036	Throttle Valve Seat	1
14	30H200381	Reverse Ring	1
15	30H200380	Housing-MAC	1
15-1	30L200054	Label-Specification (1/2" - not shown)	1
15-2	30L200048	Label-Specification (3/8" - not shown)	1
16	30R200275	Screw (M5*16) With Washer	4
17	30H200435	Motor/Handle Housing	1
18	30R200276	Pin	1
21	30P200037	Reverse Valve	1
22	30R200279	Detent Pin	1
23	30R200280	Detent Spring	1
25	30M200085	Rear End Plate	1
26	30M200086	Cylinder	1
27	30R200282	Lock (Spring) Pin	2
28	30M200087	Rotor	1
30	30M200089	Front End Plate	1
31	30R200283	Lock (Spring) Pin	1
33	30R200285	Motor Clamp Washer	1
39	30H200382	Gasket	1
50	30H200385	Boot - Angle Head	1
51	30R200325	Screw	1
52	30R200326	Hex Nut	1
	30Y100005	**SOFT PARTS KIT**	
2		O-Ring	1
5		Lock (Spring) Pin	1
6		O-Ring P7	1
13		O-Ring	1
19		O-Ring	1
20		O-Ring	1
58		O-Ring S-46 (45.5*2)	2

ITEM #	PART #	DESCRIPTION	QTY
	30M100130	**MOTOR TUNE-UP KIT**	
24		Bearing	1
29		Blade	7
32		Bearing	1
	30D100040	**IMPACT ASSEMBLY**	
34		Hammer Pin	2
35		Hammer Frame	1
36		Hammer	1
	30D100041	**HEAD ASSEMBLY - 3/8**	
37		Bushing - Pinion Gear	1
38		Shaft- Pinion Gear	1
40		Angle Head	1
41		Washer	1
42		Bushing -Bevel-Upper	1
43		Pin- Bevel Gear	1
47		Retaining Ring	1
48		Washer	1
49		Retaining Ring	1
53		Nut - Head	1
54		3/8" Anvil-Bevel Gear	1
55		O-Ring P7 for 3/8" Sq. Dr.	1
56		Retainer for 3/8" Sq. Dr.	1
57		Needle Thrust Bearing	1
60		Set Screw (M4*P0.7-4L)	2
61		Grease Fitting	1
	30D100042	**HEAD ASSEMBLY - 1/2**	
37		Bushing - Pinion Gear	1
38		Shaft- Pinion Gear	1
40		Angle Head	1
41		Washer	1
42		Bushing -Bevel-Upper	1
43		Pin- Bevel Gear	1
44		1/2" Anvil-Bevel Gear	1
45		O-ring P7 for 1/2" Sq. Dr.	1
46		Retainer for 1/2" Sq. Dr.	1
47		Retaining Ring	1
48		Washer	1
49		Retaining Ring	1
53		Nut - Head	1
57		Needle Thrust Bearing	1
60		Set Screw (M4*P0.7-4L)	2
61		Grease Fitting	1