AG14 MINI DIE GRINDER

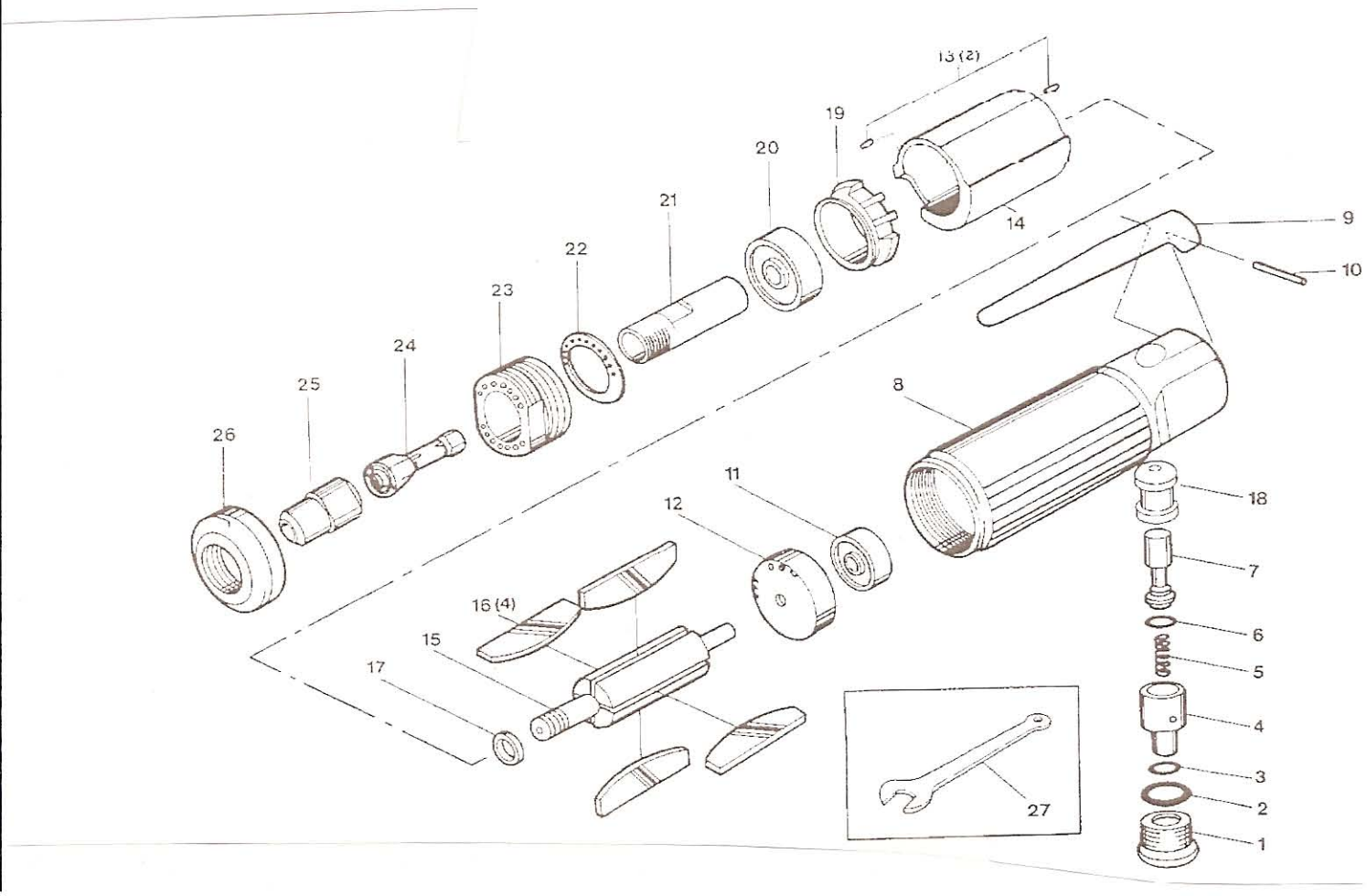

Index No	Part No	Description	Qty	Index No	Part No	Description	Qty
1	AG1401	Valve Screw	1	15	AG1415	Rotor	1
2	AG1402	Valve Scre o-ring	1	16	AG1416	Rotor Blade	4
3	AG1403	Regulator O-ring	1	17	AG1417	Rotor Collar	1
4	AG1404	Air Regulator	1	18	AG1418	Throttle Valve Bushing	1
5	AG1405	Throttle Spring	1	19	AG1419	Front End Plate	1
6	AG1406	Throttle O-ring	1	20	AG1420	Ball Bearing	1
7	AG1407	Throttle Valve	1	21	AG1421	Spindle	1
8	AG1408	Motor Housing	1	22	AG1422	Exhaust Muffler	1
9	AG1409	Throttle Lever	1	23	AG1423	Lock Nut	1
10	AG1410	Throttle lever Pin	1	24	AG1424	Collet	1
11	AG1411	Ball Bearing	1	25	AG1425	Collet Nut	1
12	AG1412	Rear End Plate	1	26	AG1426	Housing Cap	1
13	AG1413	Dowel Pin	2	27	AG1427	Large Spanner Wrench	1
14	AG1414	Cylinder	1	28	AG1428	Small Spanner Wrench	1

AG14M001 (Motor Housing Assembly): includes 8,9,10,18,23,26
AG14M002 (Air Motor Assembly): includes 11,12,13,14,15,16,17,19,20
AG14TVK (Throttle Valve Assembly): includes 1,2,3,4,5,6,7,18